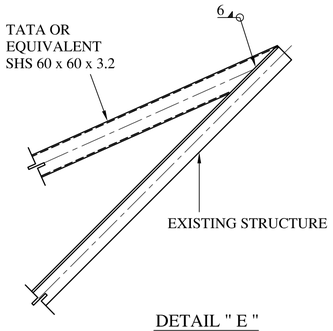

DETAIL " E "
(SCALE - 1:10)

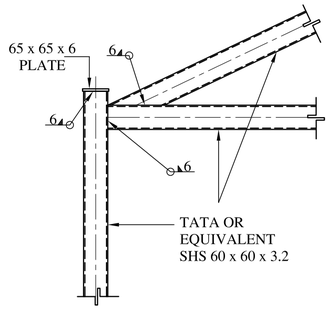

DETAIL " C "
(SCALE - 1:10)

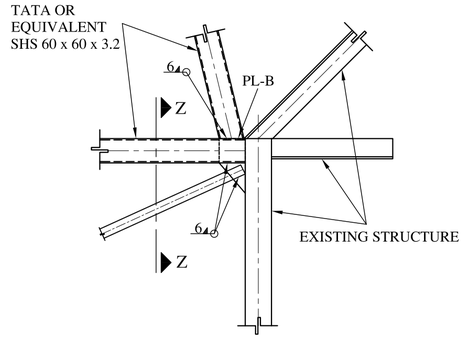

DETAIL " D "
(SCALE - 1:10)

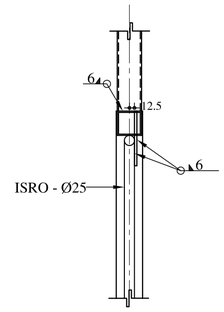

SECTION "Z - Z "
(SCALE - 1:10)

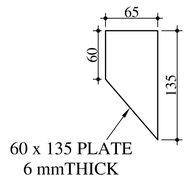

DETAIL FOR PL-B
(SCALE - 1:5)

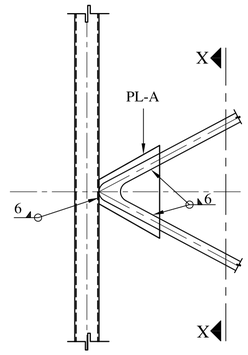

DETAIL " A "
(SCALE - 1:10)

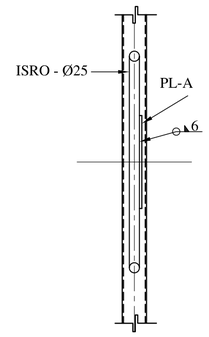

SECTION "X - X "
(SCALE - 1:10)

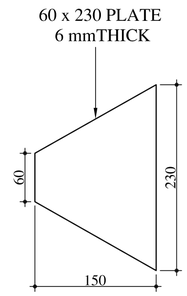

DETAIL FOR PL-A
(SCALE - 1:5)

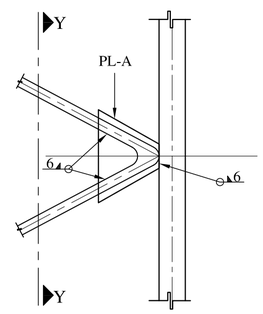

DETAIL " B "
(SCALE - 1:10)

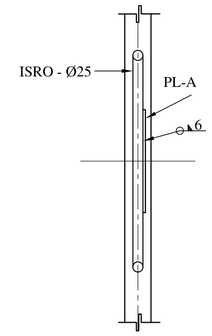

SECTION "Y - Y "
(SCALE - 1:10)

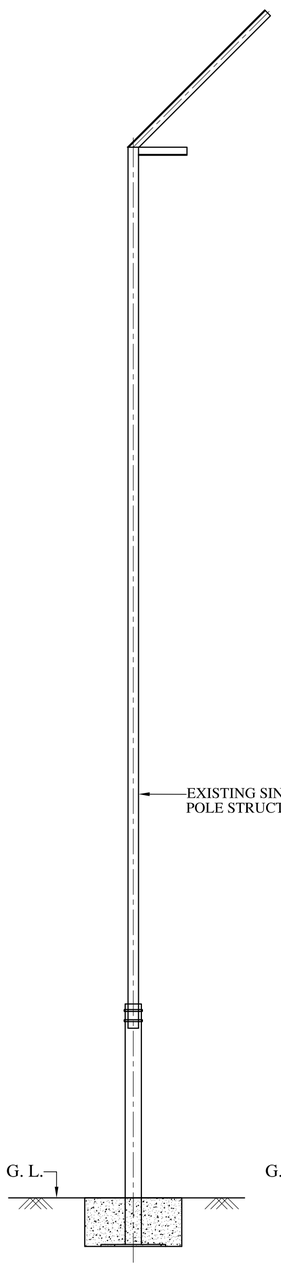

EXISTING POLE STRUCTURE
(SCALE - 1:25)

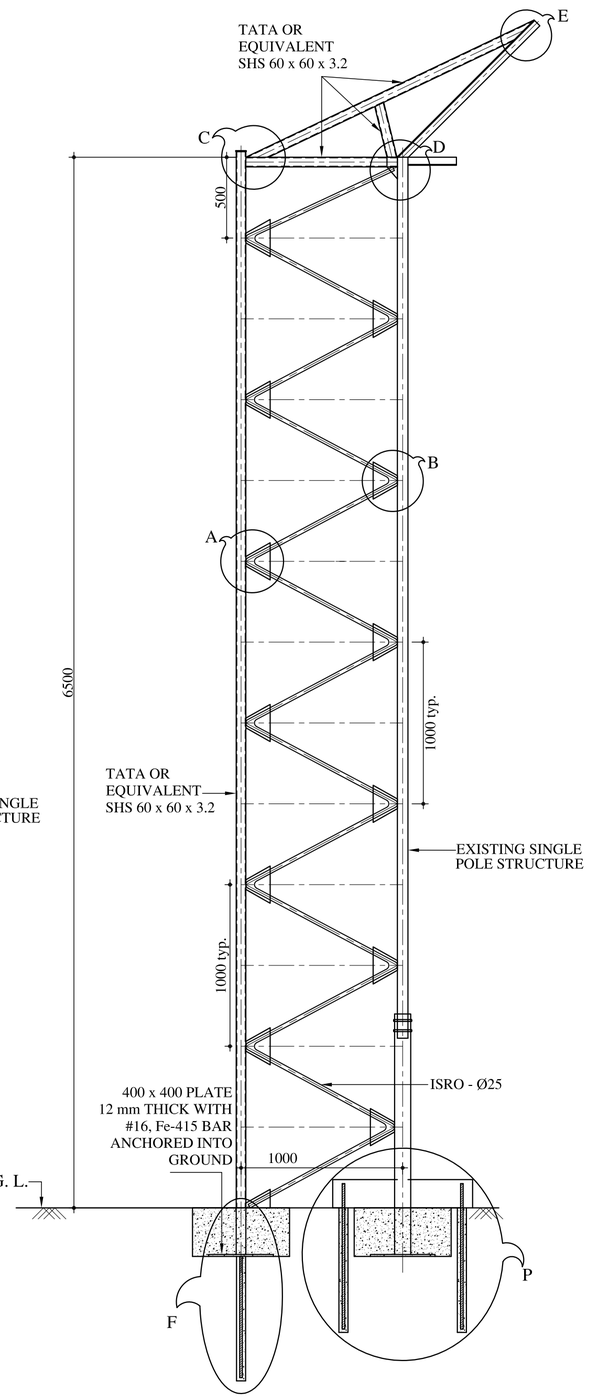

PROPOSED STRENGTHENING SYSTEM
(SCALE - 1:25)

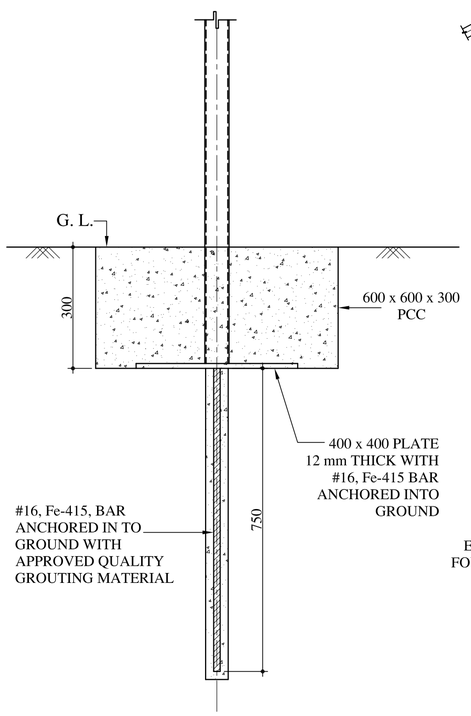

DETAIL " F " (FOUNDATION DETAIL FOR SHS 60 x 60 x 3.2)
(SCALE - 1:10)

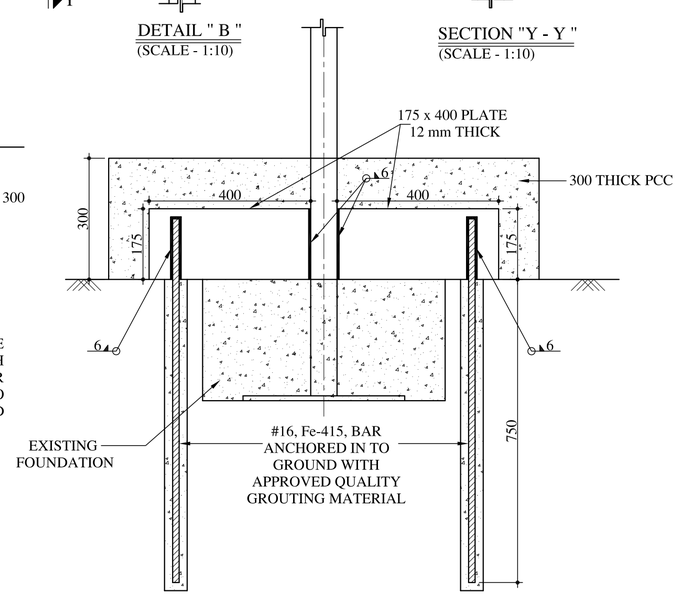

DETAIL " P "
(FOUNDATION DETAIL FOR EXISTING POLE STUCTURE)
(SCALE - 1:10)

NOTES:-

1) ALL DIMENSIONS ARE IN mm AND LEVELS ARE IN METER.
2) Ø INDICATES MILD STEEL BARS CONFORMING IS:432-1982 OR EQUIVALENT.
3) ALL WELDING SHALL BE FILLET WELD OF SIZE 6 mm AND WELDING TO BE DONE ALL AROUND THE SECTION.
4) ALL STRUCTURAL STEEL ROLLED SECTIONS AND PLATES SHALL CONFORM TO IS : 226 - 1975 AND IS : 2062 - 1984
5) WELDING SHALL CONFORM TO IS : 816 - 1969
6) ALL ELECTRODES SHALL CONFORM TO IS : 814 (PART - I) - 1974
7) ALL M.S. FITTED BOLTS AND NUTS SHALL CONFORM TO IS : 3694 - 1982
8) WASHERS SHALL CONFORM TO IS : 5369 - 1975, IS : 5370 - 1969, IS : 5372 - 1975 OR IS : 5374 - 1975
9) DIMENSIONS ARE TO BE READ AND NOT MEASURED.
10) ANY DISCREPANCY SHALL BE BROUGHT TO THE NOTICE OF THE ENGINEER IN CHARGE, BEFORE FURTHER PROGRESS OF THE WORK.
11) SHS ARE TATA SHS OR EQUIVALENT WITH YST = 310 MPa

REV. NO.	REV. DATE	REVISION DETAILS	APPD. BY

	NAME	SIGN	DATE
DRAWN BY:-			
CHECKED BY:-			
APPROVED BY:-			

PRINCIPAL CLIENT :-

PROJECT TITLE:-

DRG. NO.

DRAWING TITLE:-
STRENGTHENING OF ANIMAL ENCLOSURES AT ZOO

LAKHLANI ASSOCIATES
CIVIL AND STRUCTURAL ENGINEERS
SHREE SOCIETY MAIN ROAD
Nr. SURYAMUKHI HANUMAN TEMPLE
NANA MAVA MAIN ROAD
NEXT TO VIVEKANAND SCHOOL
RAJKOT - 360 001
PHONE : +91 281 247 51 60
E-mail : contact@lakhlani.com
Web : www.lakhlani.com