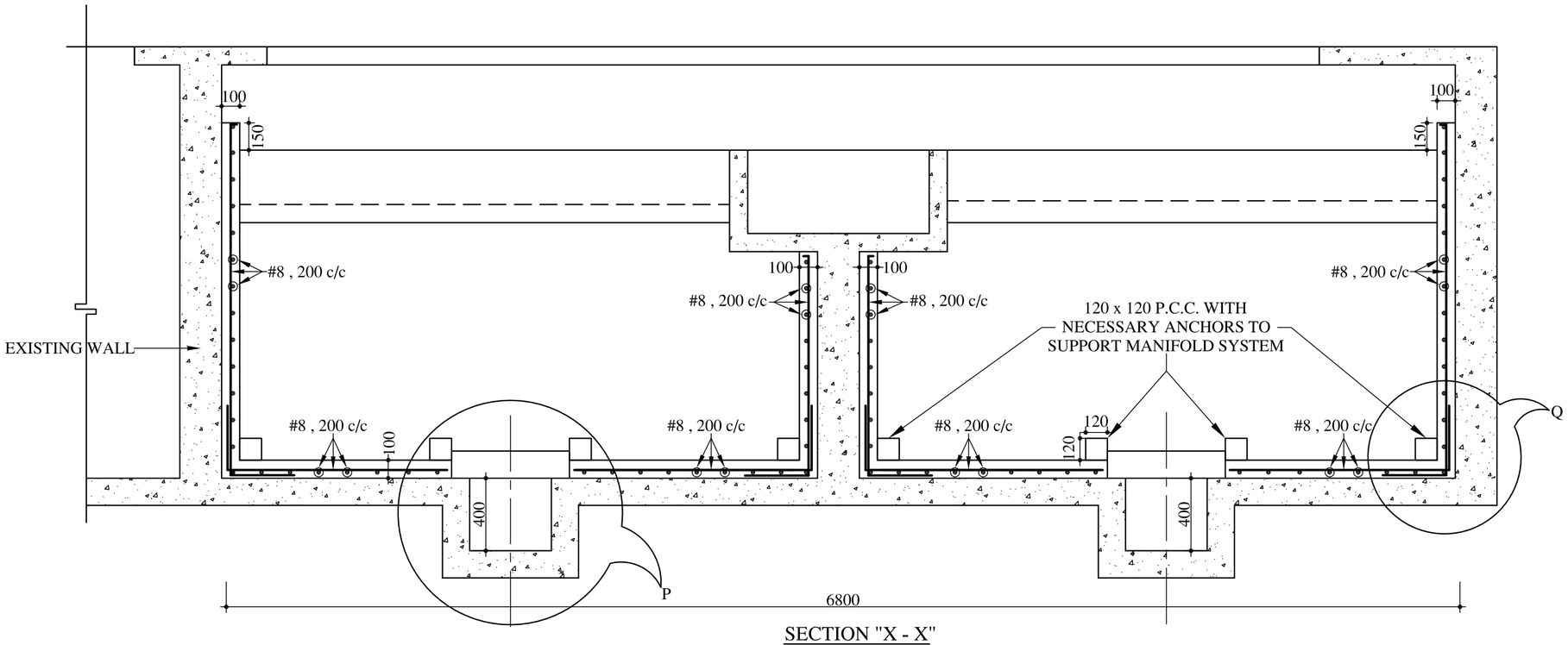

SECTION "X - X"
(SCALE :-1:25)

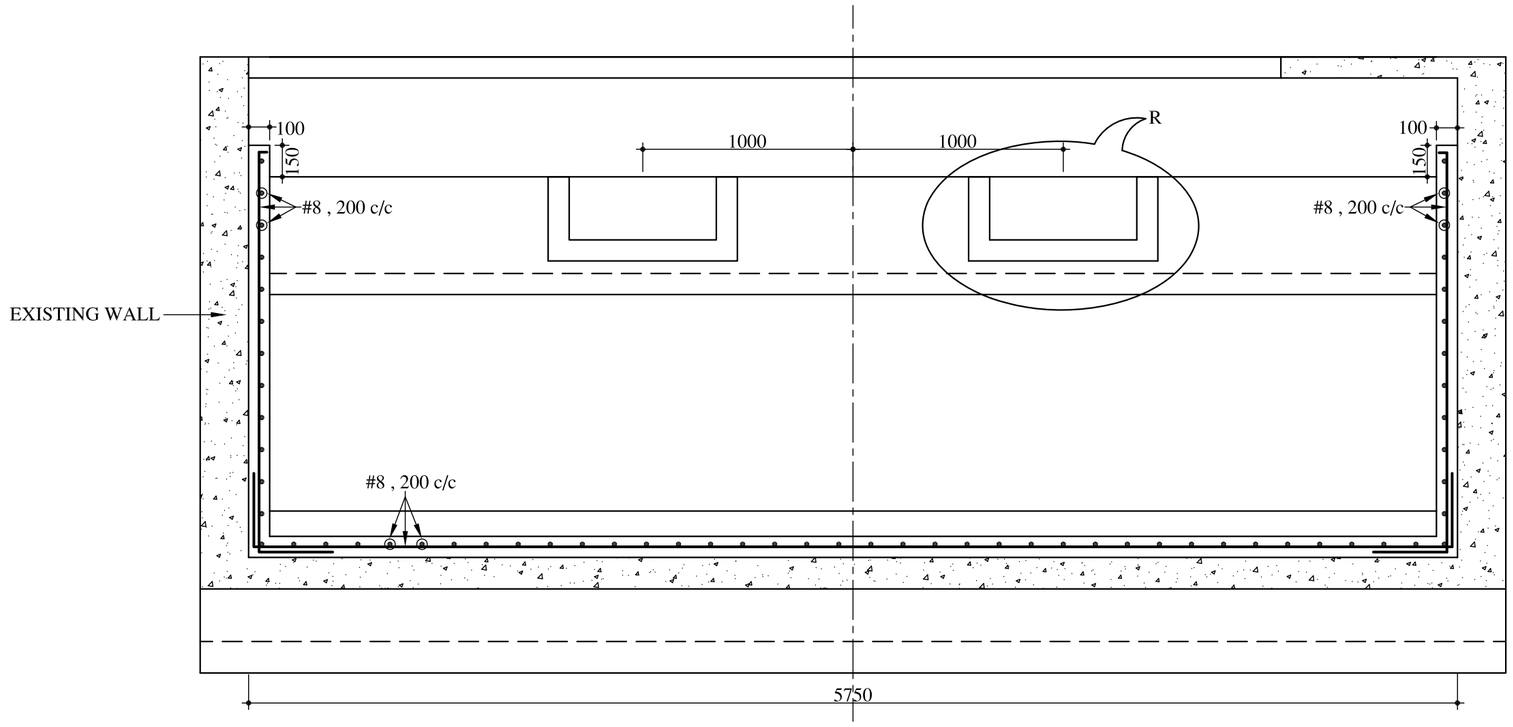

SECTION "Y - Y"
(SCALE :-1:25)

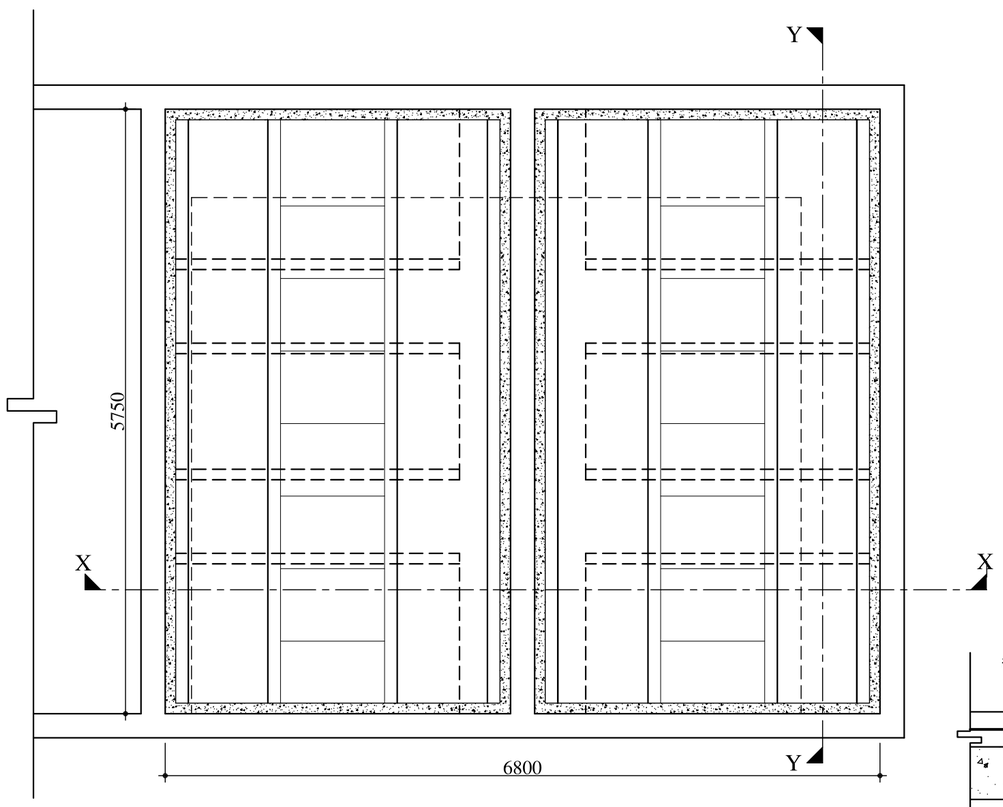

PART PLAN FOR FILTER BED
(SCALE :-1:50)

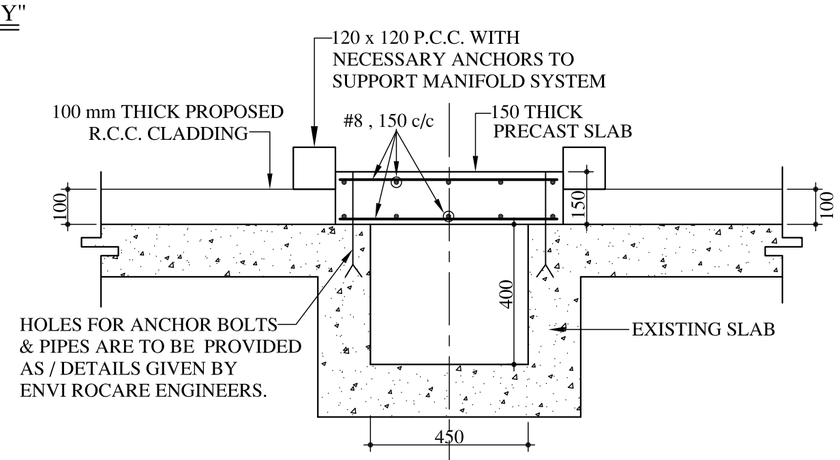

DETAIL AT "P"
(SCALE :-1:15)

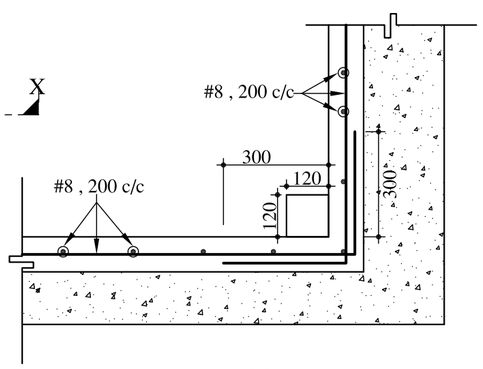

DETAIL AT "Q"
(SCALE :-1:15)

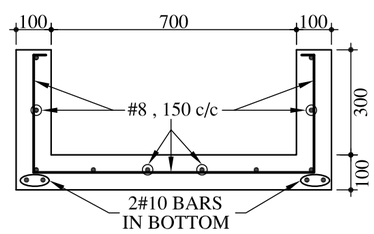

DETAIL AT "R"
(SCALE :-1:15)

NOTES:-

1) ALL DIMENSIONS ARE IN m.m.
2) ANY DIMENSIONS ARE NOT TO BE SCALLED FROM DRAWING.
3) CONCRETE MIX M-25 CONFORMING TO IS:456-2000, IS TO BE USED FOR ALL COMPONENTS OF GSR AND SUCTION CHANNEL
4) CLEAR COVER TO REINFORCEMENT IN WALLS AND SLABS SHALL BE 40 m.m.
5) CONCRETE SHALL BE MACHINE MIXED, MACHINE VIBRATED AND SHALL BE CONSTANTLY WET FOR SEVEN DAYS AFTER DATE OF PLACING.
6) # INDICATES HIGH YIELD STRENGTH DEFORMED BARS, CRS - Fe 500, CONFORMING TO IS:1786-1985 OR EQUIVALENT.
7) ANY DISCREPANCY SHALL BE BROUGHT TO THE NOTICE OF THE ENGINEER IN CHARGE, BEFORE FURTHER PROGRESS OF THE WORK.
8) LAP LENGTH FOR BARS IN LIQUID RETAINING STRUCTURES, Ld = 40 x DIA. OF BAR
9) REFER DRAWINGS PROVIDED BY ENVIROCARE ENGINEERS ALONG WITH THIS DRAWING.

REV. NO.	REV. DATE	REVISION DETAILS	APPD. BY

	NAME	SIGN	DATE
DRAWN BY:-			
CHECKED BY:-			
APPROVED BY:-			

PRINCIPAL CLIENT :-

PROJECT TITLE:-

DRG. NO.

DRAWING TITLE:-
STRENGTHENING OF FILTER BED FOR WATER TREATMENT PLANT

LAKHLANI ASSOCIATES
CIVIL AND STRUCTURAL ENGINEERS
SHREE SOCIETY MAIN ROAD
Nr. SURYAMUKHI HANUMAN TEMPLE
NANA MAVA MAIN ROAD
NEXT TO VIVEKANAND SCHOOL
RAJKOT - 360 001
PHONE : +91 281 247 51 60
E-mail : contact@lakhlani.com
Web : www.lakhlani.com